> **Port size: 3/8" ... 3/4" (ISO G/PTF)**

> **Excelon design allows in-line installation or modular installation with other Excelon products**

> **Quick release bayonet bowl**

Technical features

Medium:
Compressed air only
Maximum operating pressure:
Transparent bowls with guard:
10 bar (145 psi)
Metal bowls:
17 bar (250 psi)
Filter element:
5 µm & 40 µm
Port size:
G3/8, G1/2, G3/4,
3/8 PTF 1/2 PTF , 3/8 PTF

Flow:
83 dm^3/s at port size: G1/2
Operating pressure: 6,3 bar (91 psi)
Δp: 0,5 bar (7.2 psi)
Filter element: 40 µm
Drain:
Manual or automatic
Automatic drain operating conditions (float operated):
Bowl pressure required to close drain: > 0,35 bar (5 psi)
Bowl pressure required to open drain: ≤ 0,2 bar (2.9 psi)
Minimum air flow required to close drain: 1 dm^3/s (2 scfm)
Manual operation: depress pin inside drain outlet to drain bowl
Service life indicator:
Available on request
Ambient/Media temperature:
Transparent bowl:
-34° ... +50°C (-30° ... +122°F)
Metal bowl:
-34° ... +80°C (-30° ... +175°F)
Air supply must be dry enough to avoid ice formation at temperatures below +2°C (+35°F).

Materials:
Body: Die cast aluminium
Bowl: Transparent PC with steel guard or die cast aluminium
Liquid level indicator lens (metal bowl): Transparent PA
Filter element: sintered PP
Elastomers: CR & NBR

Technical data - standard models

Symbol	Port size	Size	Drain	Filter element (µm)	Bowl with guard	Weight (kg)	Model
	G3/8	—	Manual	40	PC (transparent)	0,83	F74G-3GN-QP3
	G1/2	Basic	Manual	40	PC (transparent)	0,81	F74G-4GN-QP3
	G3/4	—	Manual	40	PC (transparent)	0,79	F74G-6GN-QP3
	G3/8	—	Manual	5	PC (transparent)	0,83	F74G-3GN-QP1
	G1/2	Basic	Manual	5	PC (transparent)	0,81	F74G-4GN-QP1
	G3/4	—	Manual	5	PC (transparent)	0,79	F74G-6GN-QP1
	G3/8	—	Automatic	40	PC (transparent)	0,83	F74G-3GN-AP3
	G1/2	Basic	Automatic	40	PC (transparent)	0,81	F74G-4GN-AP3
	G3/4	—	Automatic	40	PC (transparent)	0,79	F74G-6GN-AP3
	G3/8	—	Automatic	5	PC (transparent)	0,83	F74G-3GN-AP1
	G1/2	Basic	Automatic	5	PC (transparent)	0,81	F74G-4GN-AP1
	G3/4	—	Automatic	5	PC (transparent)	0,79	F74G-6GN-AP1

Option selector

F74G-★★★-★★★

Port size	Substitute
3/8"	3
1/2"	4
3/4"	6
Thread form	**Substitute**
PTF	A
ISO G parallel (standard)	G
Sevice life indicator	**Substitute**
Without (standard)	N
With on request	D
Drain	**Substitute**
Manual	Q
Automatic	A

Filter element	Substitute
5 µm (standard)	1
40 µm (standard)	3
Bowl	**Substitute**
Metal	D
Transparent with guard (standard)	P

Our policy is one of continued research and development. We therefore reserve the right to amend, without notice, the specifications given in this document. (1998 - 8056e) © 2015 Norgren Inc.

Flow characteristics

Element 40 µm
Port size G1/2

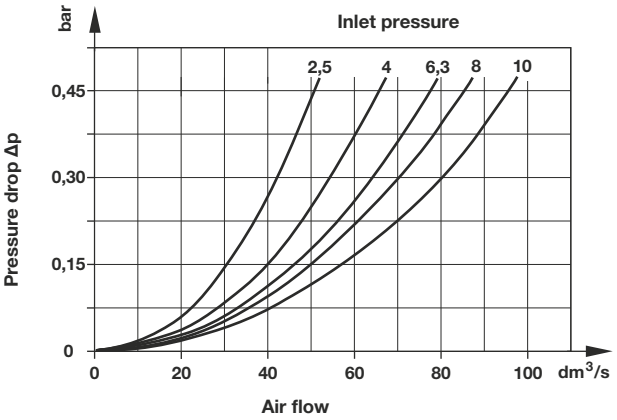

Element 5 µm
Port size G1/2

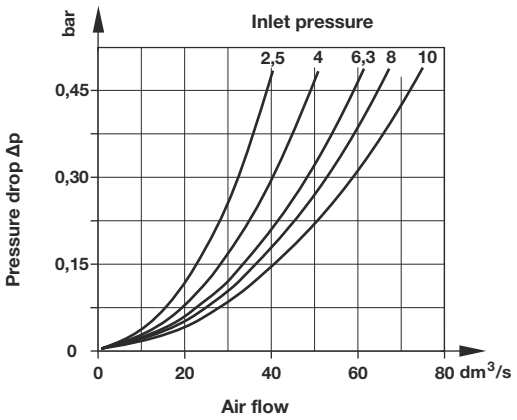

Accessories

Wall mounting bracket	Quikclamp®	Quikclamp with wall bracket®	Quikmount pipe adaptor *1)	Porting block with three alternative 1/4" ports	2/2 Shut-off valves (for full technical specification see datasheet 8.200.600)	3/2 Shut-off valves (for full technical specification see datasheet 8.200.600)
Page 3	Page 3	Page 3	Page 3	Page 3	Page 3	Page 3
4324-50	4314-51	4314-52	G3/8: 4315-10	G1/4: 4316-52	G 3/8: T74B-3GA-P1N	G 3/8: T74T-3GA-P1N
			G1/2: 4315-11	1/4 PTF: 4316-50	G 1/2: T74B-4GA-P1N	G 1/2: T74T-4GA-P1N
			G3/4: 4315-12		G 3/4: T74B-6GA-P1N	G 3/4: T74T-6GA-P1N
			3/8 PTF: 4315-02			
			1/2 PTF: 4315-03			1/2 PTF: T74T-4AA-P1N
			3/4 PTF: 4315-04		3/4 PTF: T74B-6AA-P1N	3/4 PTF: T74T-6AA-P1N

*1) Please use a Quikmount pipe adaptor if the Quikclamp be mounted at inlet or outlet side.

Pressure switch

Porting block for pressure switch	Pressure switch (0,5 ... 8 bar)
Page 4	
0523110000000000	0881300000000000

Padlock

Padlock (brass) with two keys *1)
0613633000000000

*1) for shut-off valves

Service kits

Automatic drain	Replacement element
F74G-KITA40 (40 µm)	4338-05 (40 µm)
F74G-KITA05 (5 µm)	4338-04 (5 µm)

Our policy is one of continued research and development. We therefore reserve the right to amend, without notice, the specifications given in this document. (1998 - 8056e) © 2015 Norgren Inc.

Drawings

Dimensions in mm
Projection/First angle

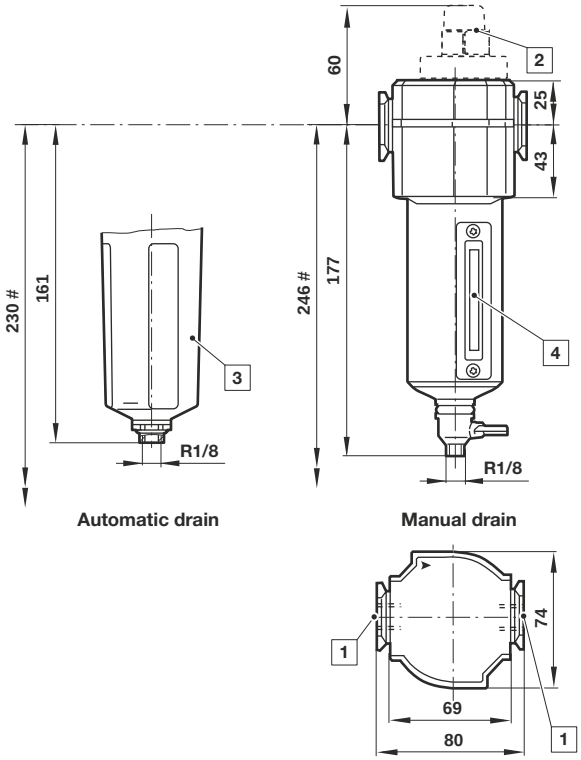

Automatic drain

Manual drain

Minimum clearance required to remove bowl
1 Main ports 3/8", 1/2" or 3/4"
2 Service life indicator on request
3 Transparent bowl with guard
4 Metal bowl with liquid level indicator lens

Accessories

Quikclamp®

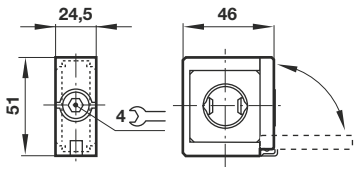

Quikclamp® with wall bracket

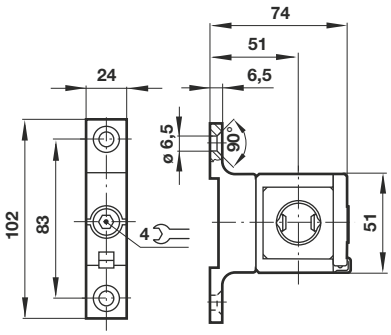

Porting block

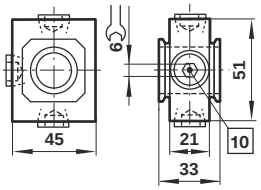

10 Ports 1/4" ISO G/PTF plugged

Pipe adapter

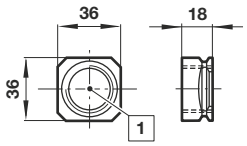

1 Main ports 3/8", 1/2" or 3/4" ISO G/PTF

Wall mounting bracket

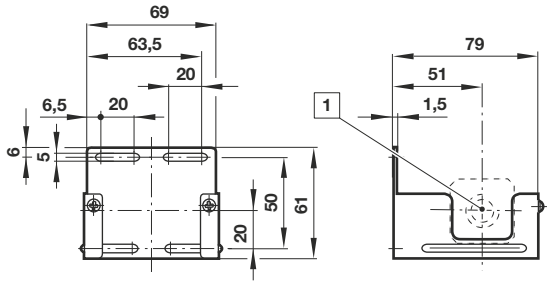

1 Main ports

Shut-off valves

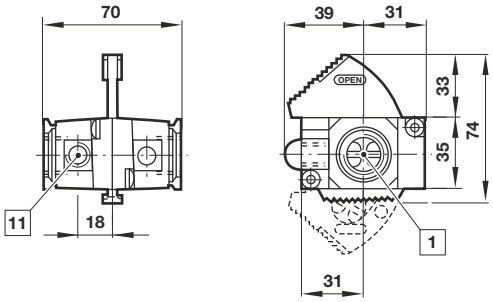

1 Main ports 3/8", 1/2" or 3/4" ISO G/PTF
11 Exhaust port 1/8"

Our policy is one of continued research and development. We therefore reserve the right to amend, without notice, the specifications given in this document. (1998 - 8056e) © 2015 Norgren Inc.

Porting block for pressure switch

Dimensions in mm
Projection/First angle

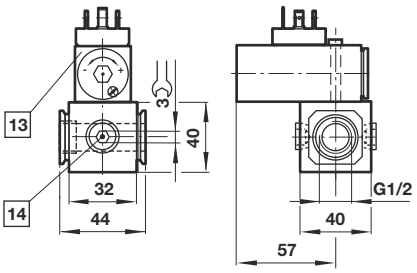

13 Pressure switch is not in scope of delivery
14 Alternative G1/4 ports plugged

Warning

These products are intended for use in industrial compressed air systems only. Do not use these products where pressures and temperatures can exceed those listed under **»Technical features/data«**.
Before using these products with fluids other than those specified, for non-industrial applications, life-support systems or other applications not within published specifications, consult IMI Precision Engineering, Norgren GmbH.
Through misuse, age, or malfunction, components used in fluid power systems can fail in various modes.

The system designer is warned to consider the failure modes of all component parts used in fluid power systems and to provide adequate safeguards to prevent personal injury or damage to equipment in the event of such failure.
System designers must provide a warning to end users in the system instructional manual if protection against a failure mode cannot be adequately provided.
System designers and end users are cautioned to review specific warnings found in instruction sheets packed and shipped with these products.

Our policy is one of continued research and development. We therefore reserve the right to amend, without notice, the specifications given in this document. (1998 - 8056e) © 2015 Norgren Inc.