- **Port size: 3/4” ... 1 1/2” (ISO G/PTF)**
- **Micro-fog lubricators provide a fine mist for most general purpose pneumatic applications**
- **Oil-fog lubricators for heavy duty lubrication**
- **Flow sensor design provides a nearly constant oil/air ratio over a wide range of air flows**

Technical features

Medium:
Compressed air only
Maximum operating pressure:
17 bar (246 psi)
Flow:
See below
Port size:
3/4”, 1”, 1 1/4” or 1 1/2”

Start point (minimum flow required for lubricator operation):
3,8 dm^3/s (8 scfm) at 6,3 bar (90 psi) inlet pressure
Bowl size:
0,5 or 1 litre

Fluid/Ambient temperature:
-20 ... +80°C (0 ... +176°F)
Air supply must be dry enough to avoid ice formation at temperatures below +2°C (+35°F).

Materials:
Body and bowl: Aluminium alloy
Sight feed dome: Transparent PA
Elastomers: CR & NBR

Technical data, standard models

Symbol	Port size	Flow *1) (dm^3/s)	Lubricator type	Weight (kg)	Model
	G3/4	76	Micro-fog	1,69	L17-600-MP9G
	G1	130	Micro-fog	1,62	L17-800-MP9G
	G1 1/4	130	Micro-fog	2,11	L17-A00-MP9G
	Rp1 1/2	130	Micro-fog	1,67	L17-B00-MP9C
	G3/4	76	Oil-fog	1,69	L17-600-OP9G
	G1	130	Oil-fog	1,62	L17-800-OP9G
	G1 1/4	130	Oil-fog	2,11	L17-A00-OP9G
	Rp1 1/2	130	Oil-fog	1,67	L17-B00-OP9C

*1) Typical flow with 6,3 bar (90 psig) inlet pressure and Δp: 0,5 bar (7 psig).

Option selector

L17-★00 -★P★★

Port size	Substitute
3/4”	6
1”	8
1 1/4”	A
1 1/2”	B

Lubricator	Substitute
Micro-fog	M
Oil-fog	O

Thread	Substitute
PTF	A
ISO Rp (only 1-1/2" ported)	C
ISO G (standard) (not available with 1 1/2” ported units)	G

Bowl	Substitute
0,5 litre, sight glass (standard)	9
1 litre, manual drain, sight glass	D

Flow characteristics

Port size 1”

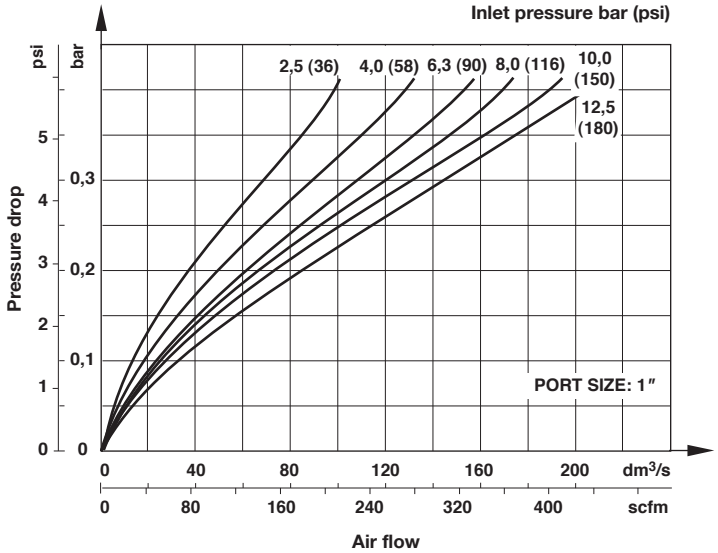

Accessories

Port size	Wall mounting bracket
3/4”	6212-50
1”	6212-50
1 1/4”	6212-51
1 1/2”	6212-51

Service kit

Micro fog: L17-100M **Oil fog:** L17-100

Sight dome replacements

Micro red: 4055-50 **Oil green:** 4055-51

Dimensions

Dimensions in mm
Projection/First angle

L17 Micro fog

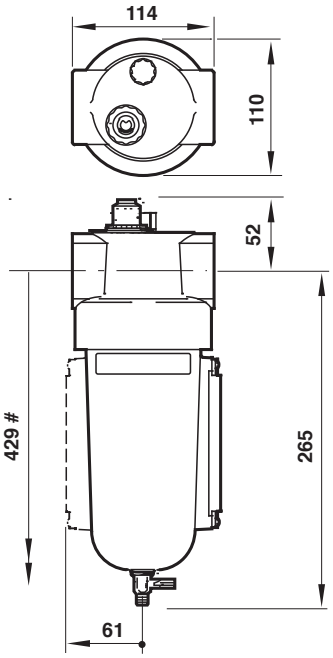

L17 Oil fog

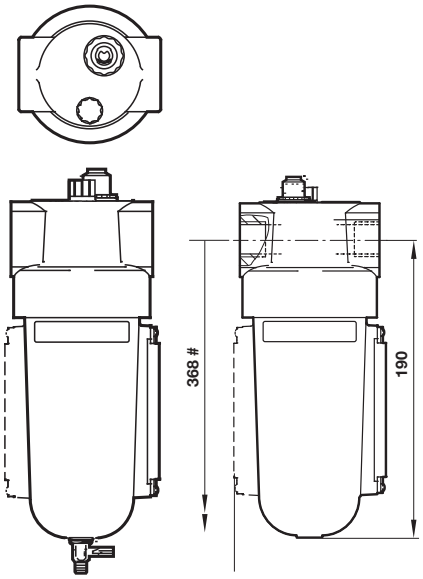

Wall mounting brackets 6212-50, 6212-51

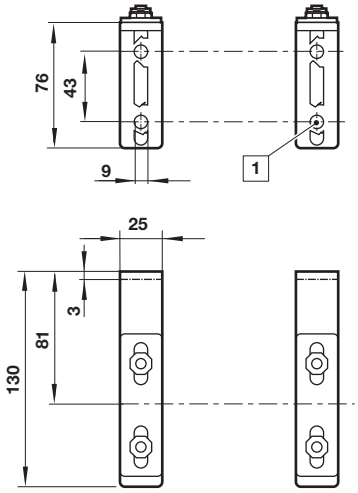

1 Mounting holes

1 litre **0,5 litre**

Min clearance required to remove bowl.

Warning

These products are intended for use in industrial compressed air systems only. Do not use these products where pressures and temperatures can exceed those listed under »**Technical features/data**«.
Before using these products with fluids other than those specified, for non-industrial applications, life-support systems or other applications not within published specifications, consult
IMI Precision Engineering, Norgren Inc.

Through misuse, age, or malfunction, components used in fluid power systems can fail in various modes. The system designer is warned to consider the failure modes of all component parts used in fluid power systems and to provide adequate safeguards to prevent personal injury or damage to equipment in the event of such failure.
System designers must provide a warning to end users in the system instructional manual if protection against a failure mode cannot be adequately provided.
System designers and end users are cautioned to review specific warnings found in instruction sheets packed and shipped with these products.