97300 NAMUR, 3/2 & 5/2
Indirect solenoid actuated spool valve

- Port size: G1/4, 1/4 NPT, NAMUR Interface
- Main application: Single and double acting actuators
- 5/2 way valve usable as 3/2 way valve
- Crossover-free switching
- Manual override with detent
- Variable valve solenoid combination

Technical features

Medium:
Filtered, lubricated or non-lubricated and dry compressed air

Operation:
Indirect solenoid operated spool valve

Operating pressure:
2 ... 8 bar (29 ... 116 psi)
Below -10°C (14°F) must be > 2,5 bar (> 36 psi)

Port size:
NAMUR G1/4, NAMUR 1/4 NPT
NAMUR Interface with integrated recirculation from the exhaust air to the acutator sping chamber

Flow direction:
Fixed

Mounting position:
Optional

Ambient/Media temperature:
-15 ... +50°C (+5 ... +122°F)
Air supply must be dry enough to avoid ice formation at temperatures below +2°C (35°F).

Materials:
Housing: Aluminium anodized
Pilot flange: Plastic (PBT)
Flange plate: Aluminium
Seals: NBR

Technical data
Housing: Aluminium anodized, Sealing: NBR -15 ... +50°C (+5 ... 122°F)

Symbol	Port size	Actuation/Return	Flow (l/min)	Weight (kg)	(lbs)	Drawing No.	Model *1)
	NAMUR G1/4	Solenoid/Spring	1230	0,42	0.9	1	9730000
	NAMUR 1/4 NPT	Solenoid/Spring	1230	0,42	0.9	1	9730010
	NAMUR G1/4	Solenoid/Solenoid	1250	0,50	1.1	2	9731000
	NAMUR 1/4 NPT	Solenoid/Solenoid	1250	0,50	1.1	2	9731010

*1) When ordering please indi ate solenoid, voltage and current type (frequency).

Option selector

973★0★0 ★★★★ ★★★★★

Function)	Substitute
5/2 way, spring return (3/2 way spare adaptor plate supplied)	0
5/2 way, solenoid return (3/2 way spare adaptor plate supplied)	1

Ports size	Substitute
G1/4	0
1/4 NPT	1

Voltage	Substitute
24 V d.c.	02400
230 V a.c.	23050

Solenoid actuators	Substitute
See table on page 2	

Solenoids, standard voltages

	Power consumption 24 V d.c. (W)	Power consumption 230 V a.c. (VA)	Rated current 24 V d.c. (m A)	Rated current 230 V a.c. (m A)	Protection class IP/NEMA	Ex-Protection (ATEX-Category)	Temperature Ambient/Media (°C)	Electrical connection	Weight (kg)	Drawing No.	Circuit diagram No.	Model
	1,8	–	70	–	IP65 (with connector)	–	-15 ... +50	Connector DIN EN 175301-803, form B *1)	0,1	11	1	3050
	1,6	–	30	–	IP65 (with connector)	–	-15 ... +50	Connector DIN EN 175301-803, form A *1)	0,1	12	1	3036
	2	–	85	–	IP65 (with connector)	II 3 G Ex nA IIC T5 Gc II 3 D Ex tc IIIC T95° Dc IP65	-15 ... +50	Connector DIN EN 175301-803, form A *1)	0,3	5	1	3046
	–	2	–	18	IP65 (with connector)	II 3 G Ex nA IIC T5 Gc II 3 D Ex tc IIIC T95° Dc IP65	-15 ... +50	Connector DIN EN 175301-803, form A *1)	0,3	5	1	3047
	2,7	–	115	–	IP65 (with connector)	II 2 G Ex mb IIC T5 Gb II 2 D Ex mb tb T95°C Db	-20 ... +50	Cable length 3 m	0,3	13	14	3062
	–	2,1	–	9	IP65 (with connector)	II 2 G Ex mb IIC T5 Gb II 2 D Ex mb tb T95°C Db	-20 ... +50	Cable length 3 m	0,3	13	15	3063
	2,7	–	115	–	IP66 (with connector)	–	-10 ... +50	Connector *1) M12x1, DIN IEC 61076-2-101 Solenoid with yellow LED	0,1	14	17	3071

Standard voltages (±10%) 24 V d.c., 230 V a.c., other voltages on request. Design according to VDE 0580, EN 50014/50028. 100% duty cycle.
*1) Connector/cable gland is not scope of delivery,, see table »Accessories«

Approvals

Model	Approvals ATEX	Datasheet
3046, 3047	Declaration by the Manufacturer	N/en 7.1.555
306x	PTB 03 ATEX 2015	N/en 7.1.560

Electrical connection M12 x 1

Model	Pin	Cable
	1	brown
	2	white
	3	blue
	4	black

Accessories

Connector DIN EN 175301-803	4-pin, 90°	4-pin, 90°	4-pin, straight	4-pin, straight
				
	Page 7	Page 7	Page 7	Page 7
0570275, form A	0523058 (2 m cable,4-core)	0523056 (without cable)	0523057 (2 m cable, 4-core)	0523055 (without cable)
0680003, form B	0523053 (5 m cable,4-core)		0523052 (5 m cable, 4-core)	

Silencer

Page 7
C/S2 (1/4 NPT)
M/S2 (G1/4)

NAMUR accessories

Throttle control plate *1)	Flange plate	Yoke	Distance plate for pressure switches	Mounting plate	Quick exhaust module *2)
					
Page 6	Page 5	Page 6	Page 6	Page 6	
4040239	0612790 (NAMUR single connection plate)	0540593	0540109	0613453 (90°)	4050218
	0612791 (NAMUR-rip use in combination with 0612790)			0612631 (180°)	

*1) The throttle control plate 4040239 has a minimum flow rate for safety reason.
*2) Technical details see catalogue page en 5.4.820.

Drawings
Valves

Dimensions in mm
Projection/First angle

1

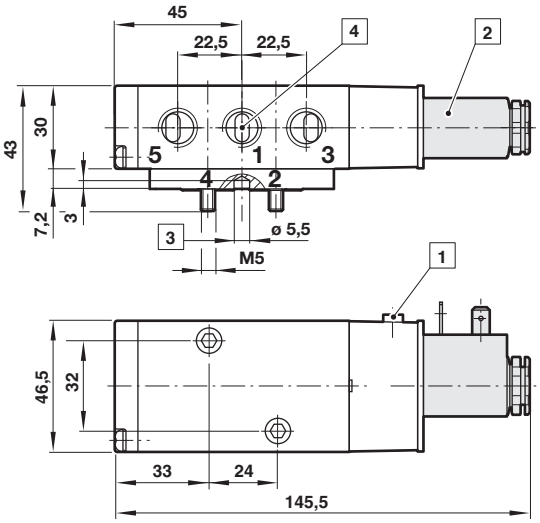

2

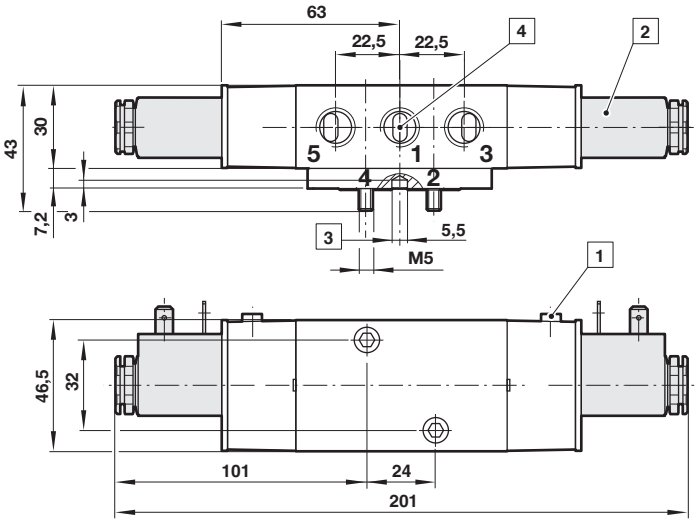

1 Manual override
2 Solenoid operator
3 Coding stud
4 Port size G1/4 or 1/4 NPT

Solenoids

Dimensions in mm
Projection/First angle

(11)

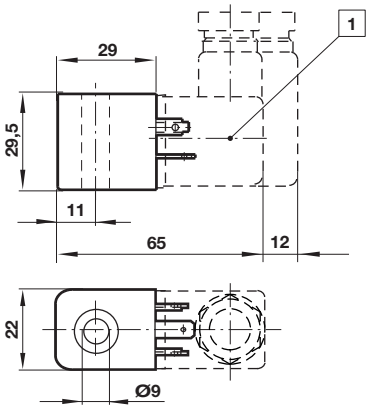

(12)

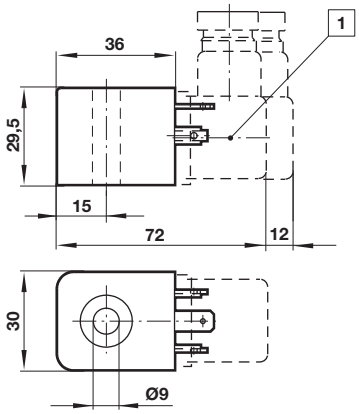

(13)

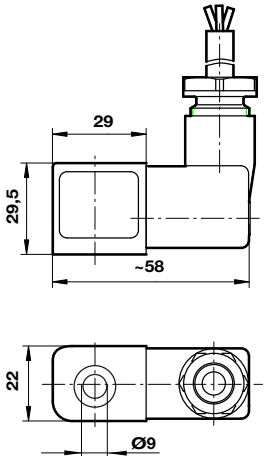

(14)

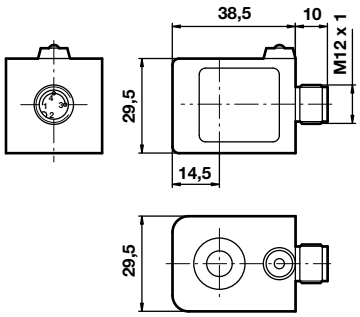

1 Connector 4 x 90° turnable

Circuit diagrams

(1)

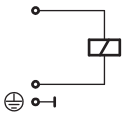

(14)

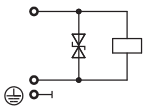

(15)

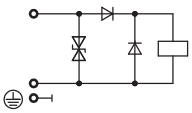

(17)

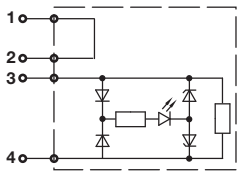

NAMUR hole pattern (actuator side)

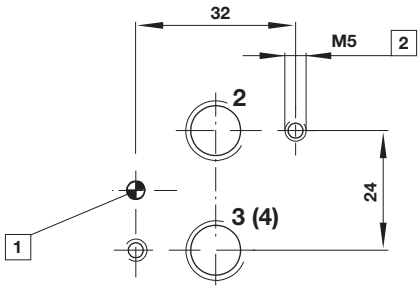

1 Coding stud threaded
2 10 mm deep

Conversion instructions of 5/2 into 3/2 way function

5/2 way function

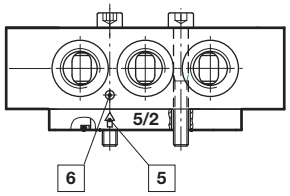

3/2 way function

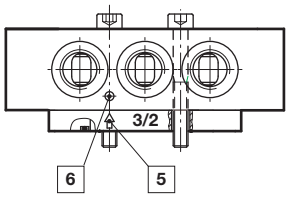

3/2 resp. 5/2 way function can be achieved just by swapping enclosed adaptor plates. Make sure marker and arrow do match as shown on above drawing. Original mode of supply: 5/2 function.

5 Arrow
6 Marker

Accessories

Silencer

Model: M/S1, C/S1

Dimensions in mm
Projection/First angle

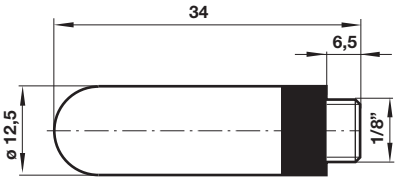

Single connection plate

Model: 0612790

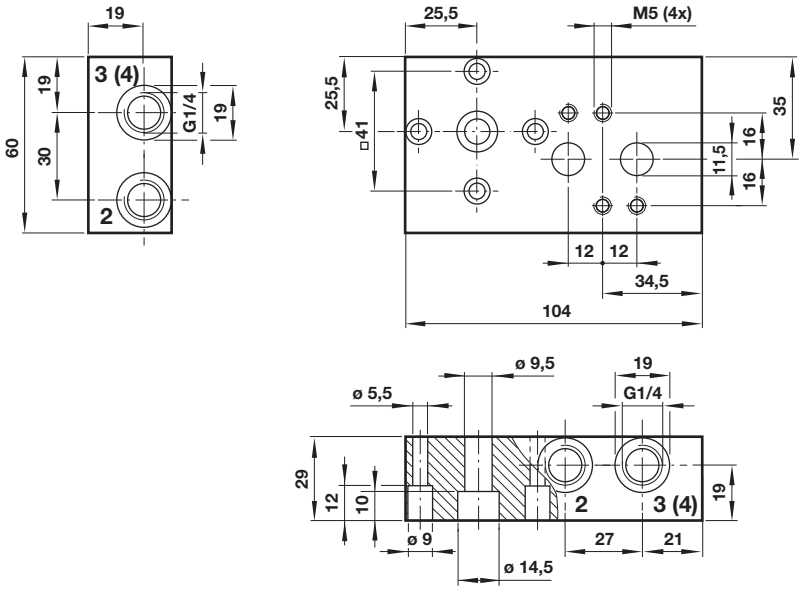

NAMUR slot

Model: 0612791

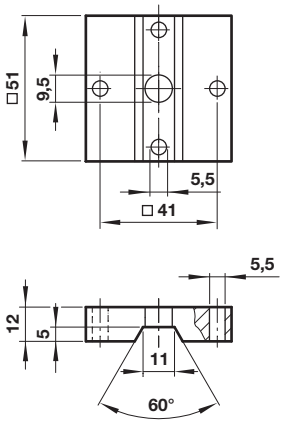

Yoke
Model: 0540593

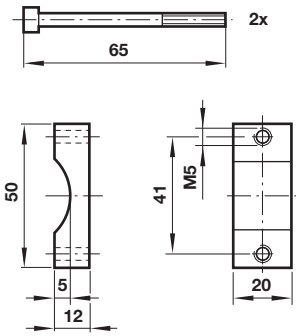

Throttle control plate
Model: 4040239

Dimensions in mm
Projection/First angle

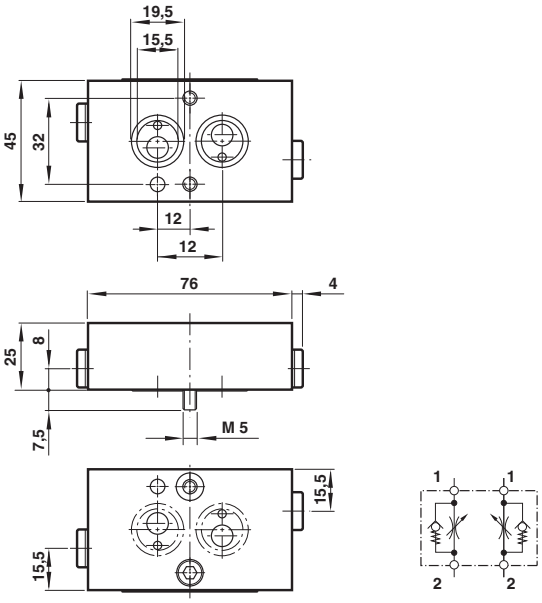

Distance plate for pressure switches
Model: 0540109

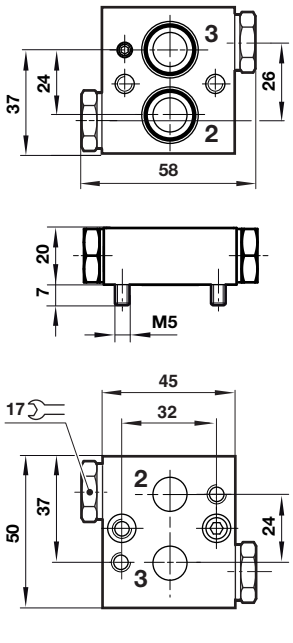

Mounting plate
Model: 0613453 (90°)

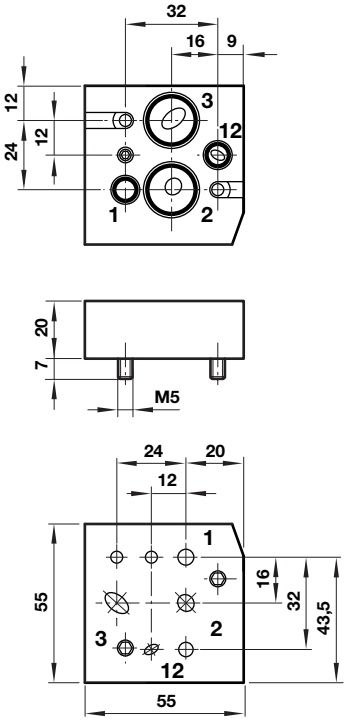

Model: 0612631 (180°)

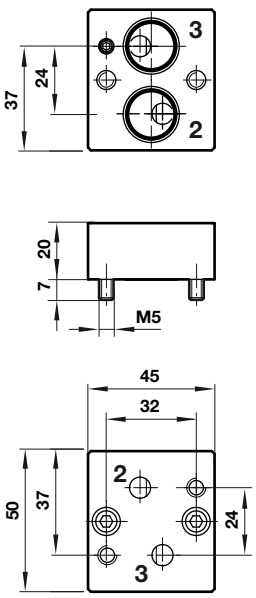

Dimensions in mm
Projection/First angle

Connector
90°, 4 pin, with PUR cable

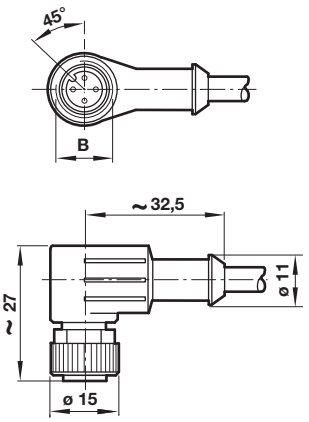

B	C	øD	øD1	F	Wire x dim.	Cable length (m)	Weight (g)	Model
M12 x 1,5	32,5	15	11	27	4 x 0,34 mm2	2	90	0523058
M12 x 1,5	32,5	15	11	27	4 x 0,34 mm2	5	180	0523053

4 pin, without cable

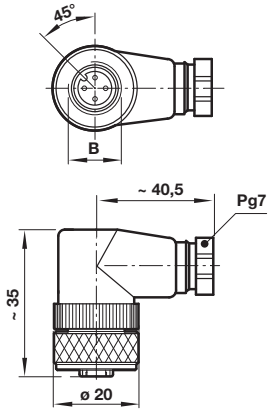

B	C	øD	E	F	Weight (g)	Model
M12 x 1,5	40,5	20	Pg 7	35	30	0523056

Straight, 4 pin, with PUR cable

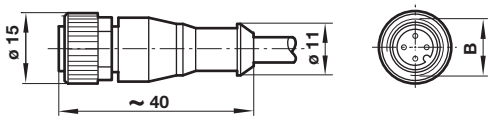

B	C	øD	øD1	Wire x dim.	Cable length (m)	Weight (g)	Model
M12 x 1,5	40	15	11	4 x 0,34 mm2	2	80	0523057
M12 x 1,5	40	15	11	4 x 0,34 mm2	5	200	0523052

Straight, 4 pin, without cable

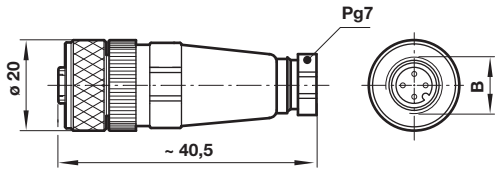

B	C	øD	E	Weight (g)	Model
M12 x 1,5	40,5	20	Pg 7	26	0523055

Warning

These products are intended for use in industrial compressed air systems only. Do not use these products where pressures and temperatures can exceed those listed under **»Technical features/data«**.
Before using these products with fluids other than those specified, for non-industrial applications, life-support systems or other applications not within published specifications, consult Norgren.
Through misuse, age, or malfunction, components used in fluid power systems can fail in various modes.

The system designer is warned to consider the failure modes of all component parts used in fluid power systems and to provide adequate safeguards to prevent personal injury or damage to equipment in the event of such failure.
System designers must provide a warning to end users in the system instructional manual if protection against a failure mode cannot be adequately provided.
System designers and end users are cautioned to review specific warnings found in instruction sheets packed and shipped with these products.